SM-8277

SMA male right-angle crimp connector
For RG316 or RG174A/U miniature coaxial cable

In-stock
Ready to
Ship

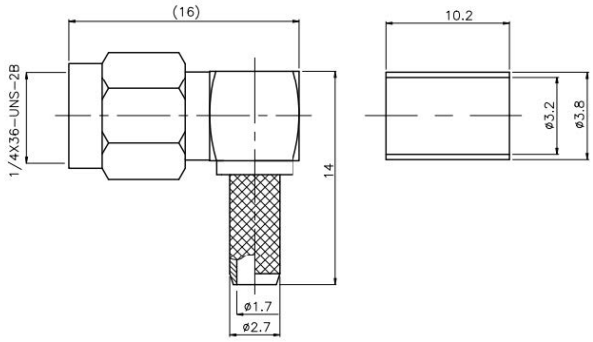

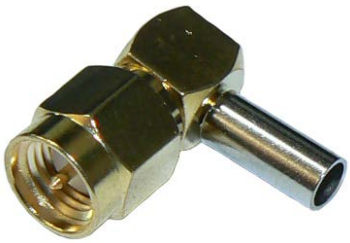

Interface	According to IEC 60169-15
Frequency range	DC-6 GHz
VSWR	≤1.2:1 at DC-3 GHz
Impedance	50Ω (Ohms)
DIelectric withstanding voltage	≥1000V RMS, 50Hz, at sea level
Dielectric resistance	≥5000 MΩ
Contact resistance	Centre Contact - ≤3.0mΩ Outer Contact - ≤2.5mΩ
Durability	≥500 mating cycles
Temperature range	-40°C to +85°C
Compatible coaxial cables	**SKU: 7877-500** : RG174A/U - MIL-SPEC miniature, stranded core, solid PE dielectric **SKU: 7853-2** : RG316 - solid core, solid PTFE dielectric, black UV stabilised jacket

Construction	
Body	Gold plated brass
Insulator	PTFE (teflon)
Centre contact	Gold plated phosphor copper
Coupling nut	Gold plated brass
Sealing cap	Gold plated brass
Ferrule	Nickel plated annealed copper
Gasket - O-ring	Silicon rubber

RG316
SKU: 7823-2
300m roll

RG174A/U
SKU: 7877-500
500m roll

Specifications are subject to change without prior notice